PU086TI

◎ POWER RATING

Continuous rating hp / rpm	Max. torque N.m(kg.m) / rpm	Fuel consumption g/kW.h(g/PS.h) / rpm
241.9 / 1.800	**957.0 (97.6) / 1.800**	**198.8 (146.3) /1.800**

1. The engine performance corresponds to ISO 3046, DIN 6270B.
2. Continuous power rating is to 242 hp @1800rpm.

◎ MECHANICAL SYSTEM

○ Engine Model	PU086TI
○ Engine Type	In-line 4 cycle, water cooled Turbo charged & intercooled
○ Combustion type	Direct injection
○ Cylinder Type	Replaceable dry liner
○ Number of cylinders	6
○ Bore x stroke	111(4.37) x 139(5.47) mm(in.)
○ Displacement	8.071(492.49) lit.(in3)
○ Compression ratio	16.7 : 1
○ Firing order	1-5-3-6-2-4
○ Injection timing	15° BTDC
○ Compression pressure	Above 28 kg/cm^2(398 psi) at 200rpm
○ Dry weight	Approx. 792 kg (1,746 lb)
○ Dimension (LxWxH)	1,242 x 918 x 1,100 mm (48.9 x 36.1 x 43.3 in.)
○ Rotation	Counter clockwise viewed from Flywheel
○ Fly wheel housing	SAE NO.1M
○ Fly wheel	Clutch NO.14M

◎ FUEL SYSTEM

○ Injection pump	Zexel in-line "PE6P" type
○ Governor	RSV type(all speed control)
○ Feed pump	Mechanical type
○ Injection nozzle	Multi hole type
○ Opening pressure	224 kg/cm2 (3,186 psi)
○ Fuel filter	Full flow, cartridge type
○ Used fuel	Diesel fuel oil

◎ LUBRICATION SYSTEM

○ Lub. Method	Fully forced pressure feed type
○ Oil pump	Gear type driven by crankshaft
○ Oil filter	Full flow, cartridge type
○ Oil pan capacity	High level 15 liters (4.09 gal.) Low level 12 liters (3.17 gal.)
○ Angularity limit	Front down 25 deg. Front up 25 deg. Side to side 25 deg. Refer to Operation Manual
○ Lub. Oil	

◎ MECHANISM

○ Type	Over head valve
○ Number of valve	Intake 1, exhaust 1 per cylinder
○ Valve lashes at cold	Intake 0.30 mm(0.0118 in) Exhaust 0.30 mm(0.0118 in.)

◎ VALVE TIMING

	Opening	Close
○ Intake valve	16 deg. BTDC	36 deg. ABDC
○ Exhaust valve	46 deg. BBDC	14 deg. ATDC

◎ PERFORMANCE CURVE

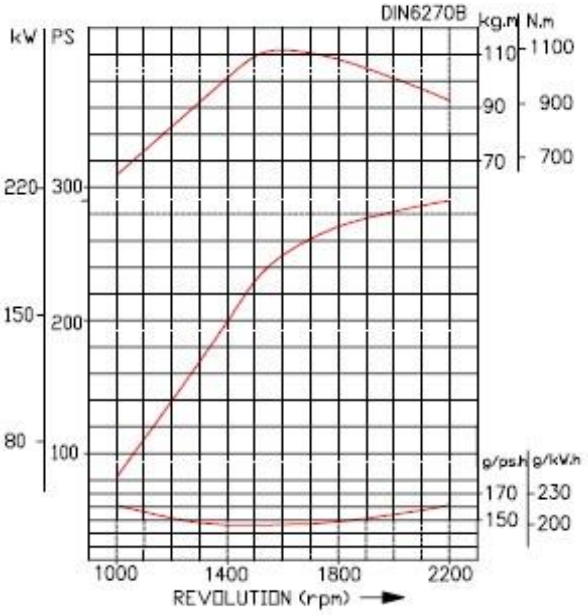

◎ OPTION & ACCESSORY PARTS

○ Engine parts	Fly wheel & housing Intake & exhaust manifold Raditor,

○ Accessory parts	silencer & air cleaner
○ Electrical parts	Gauge panel & stop solenoid

PU086TI P-DRIVE

◎ COOLING SYSTEM

○ Cooling method	Fresh water forced circulation
○ Water capacity (engine only)	14 liters (3.70 gal.)
○ Pressure system	Max. 0.9 kg/cm^2 (12.8 psi)
○ Water pump	Centrifugal type driven by belt
○ Water pump Capacity	250 liters (66.0 gal.)/min at 2,200 rpm (engine)
○ Thermostat	Wax – pellet type Opening temp. 71℃ Full open temp. 85℃
○ Cooling fan	Blower type, plastic 660 mm diameter, 7 blade

◎ ENGINEERING DATA

○ Water flow	250 liters/min @2,200 rpm
○ Heat rejection to coolant	29.7 kcal/sec @2,200 rpm
○ Air flow	25.1 m^3/min @2,200 rpm
○ Exhaust gas flow	40.1 m^3/min @2,200 rpm
○ Exhaust gas temp.	450 ℃ @2,200 rpm
○ Max. permissible restrictions	
-.Intake system	220 mmH_2O initial 635 mmH_2O final
-.Exhaust system	1,000 mmH_2O max.

◎ ELECTRICAL SYSTEM

○ Charging generator	24V x 45A alternator
○ Voltage regulator	Built-in type IC regulator
○ Starting motor ○	24V x 4.5kW
Battery Voltage	24V
○ Batt	
○ Star	

◆ CONVERSION TABLE
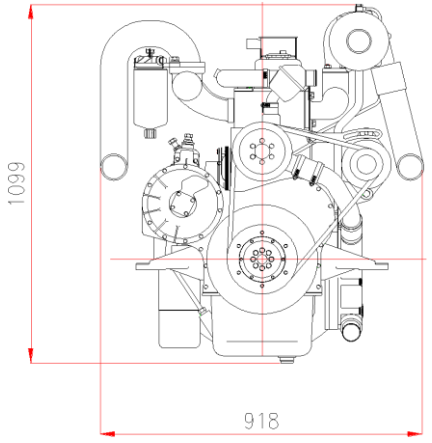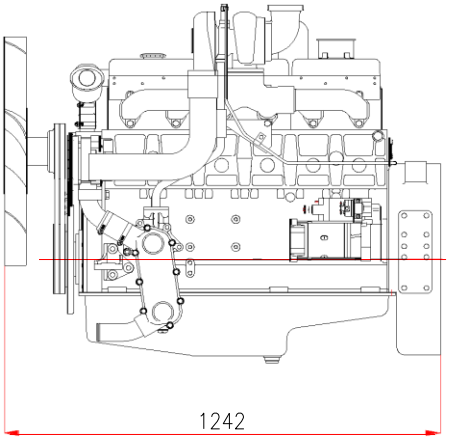
in. = mm x 0.0394	lb/ft = N.m x 0.737
PS = kW x 1.3596	U.S. gal = lit. x 0.264
psi = kg/cm2 x 14.2233	kW = 0.2388 kcal/s
in3 = lit. x 61.02	lb/PS.h = g/kW.h x 0.00162 x 35.336